START•ALL®

JUMP•PACK

5000A • 66600 joules 5S • 12V

Lithium-Ion Jump-Starter

Goodall® By VANAIR®

We Start Engines®

USER MANUAL

This publication contains the latest information available at the time of preparation. Every effort has been made to ensure accuracy. Vanair®, a Lincoln Electric Company, reserves the right to make design change modifications or improvements without prior notification.

Making unauthorized modifications to the system components WILL VOID THE WARRANTY! Always contact Vanair® before beginning any changes to the Start-All® Jump-Pack 5000A.

NOTE: Read this manual before installing, operating, or using this equipment. Failure to comply with the operation and maintenance instructions in the manual could result in bodily injury and/or damage.

WHAT'S INSIDE THE CASE

- (1) 18VDC 100-240VAC Wall Charger
- (1) 18VDC Port Charger
- (1) 3-in-1 Cord (USB lightning®, USB-C, and micro-USB connectors)
- (1) USB-C Cord
- (1) Carrying Case
- (1) Operation Manual
- (1) Safety Strap
- (1) Carabiner and Clip
- (1) Quick Start Guide

SECTION 1: Safety

1.1 INFORMATION PERTAINING TO RISK OF FIRE, ELECTRIC SHOCK, OR INJURY TO PERSONS

DANGER

Fire. The product is an electrical device that emits heat and is capable of causing burns. **DO NOT** cover the product. **DO NOT** smoke or use any source of electrical spark or fire when operating the product. Keep product away from combustible materials.

In an unlikely event of a fire, use sand or a Class ABC or BC fire extinguisher.

Electrical Shock. The product is an electrical device that can shock and cause serious injury. **DO NOT** cut power cords. **DO NOT** submerge in water or get wet.

Explosion. Unmonitored, incompatible, or damaged batteries can explode if used with the product. **DO NOT** leave the product unattended while in use. **DO NOT** attempt to jump-start a damaged or frozen battery. Use product only with batteries of recommended voltage. Operate product in well-ventilated areas.

Eye Injury. Wear eye protection when operating the product. Batteries can explode and cause flying debris. Battery acid can cause eye and skin irritation. In the case of contamination of eyes or skin, flush the affected area with running clean water and contact poison control immediately.

Personal Precaution. Only use the product as intended. Someone should be within the range of your voice or close enough to come to your aid in case of an emergency. Have a supply of clean water and soap nearby in the case of battery acid contamination. Wear complete eye protection and protective clothing while working near a battery. Always wash hands after handling batteries and related materials.

DO NOT handle or wear metal objects (tools, watches, or jewelry, etc.) when working with batteries, . If metal is dropped onto the battery, it may spark or create a short circuit resulting in electrical shock, fire, or explosion, which may result in injury, death, or property damage.

Location. Prevent battery acid from coming in contact with the product. **DO NOT** operate the product in a closed-in area or an area with restricted ventilation. **DO NOT** set a battery on top of this product. Position cable leads to avoid accidental damage by moving vehicle parts (including hoods and doors), moving engine parts (including fan blades, belts, and pulleys), or what could become a hazard that may cause injury or death.

Explosive Gases. Working in the vicinity of a lead-acid battery is dangerous. Batteries generate explosive gases during normal battery operation. To reduce the risk of battery explosion, follow all safety instructions published by the battery manufacturer and manufacturer of any equipment intended to be used in the vicinity of the battery. Review cautionary markings on these products.

Explosive Atmospheres. Obey all signs and instructions. **DO NOT** operate the product in any area with a potentially explosive atmosphere, including fueling areas or areas which contain chemicals or particles such as grain, dust, or metal powders.

Environmental Impact. Improper disposal of batteries can pose fire, injury, and environmental hazards. Always follow all warnings, instructions, and safety protocols before disposing of any batteries. The built-in lithium-ion battery in the product should be replaced only by Vanair® and must be recycled or disposed of separately from household waste.
DO NOT attempt to replace the battery yourself and **DO NOT** handle a damaged or leaking lithium-ion battery. Take precautions when a battery shows signs of fault, such as swelling, leaking, unusual odors, excessive heat, or visible damage. If the battery is demonstrating an abnormal occurrence, immediately stop use and contact Vanair®.

DO NOT place lithium-ion batteries in the garbage or the general recycling bin.

Disposal of batteries in household trash is unlawful under state and federal environmental laws and regulations. Always take used batteries to your local battery recycling center or call 1-800-8-BATTERY. Recyclers are responsible for complying with all applicable laws and regulations. Vanair® assumes no liability for injuries or property damage resulting from the recycling of battery packs. For questions regarding proper recycling of lithium-ion batteries, please contact your local authorities or a certified battery recycling service provider.

High-Consequence Activities. This product is not intended for use where the failure of the product could lead to injury, death, or severe environmental damage.

Medical Conditions. If you have any medical conditions that you believe could be affected by the product, including but not limited to; seizures, blackouts, eye strain, or headaches, consult your physician prior to the use of the product. The use of the integrated high powered flashlight contains a light sensitivity hazard. Use of the flashing LED flashlight mode may cause seizures in persons with photosensitive epilepsy, which may result in serious injury or death.

Choking Hazard. Accessories may present a choking hazard. **DO NOT** leave children unattended with the product or any accessory. The product is not a toy.

Light. Staring directly into the light beam or shine of the flashlight may result in permanent eye injury. The product is equipped with a high output LED array that emits a powerful beam at the highest setting.

Radio Frequency Interference (RFI). The product is designed, tested, and manufactured to comply with regulations governing radio frequency emissions. Such emissions from the product can negatively affect the operation of other electronic equipment, causing them to malfunction.

Important Notes Regarding RFI: This equipment has been tested and found to comply with the limits for a Class B digital device, pursuant to part 15 of the FCC Rules. These limits are designed to provide reasonable protection against harmful interference in a residential installation.

This equipment generates, uses, and can radiate radio frequency energy and, if not installed and used in accordance with the instructions, may cause harmful interference to radio communications. However, there is no guarantee that interference will not occur in a particular installation. If this equipment does cause harmful interference to radio or television reception, which can be determined by turning the equipment off and on, the user is encouraged to try to correct the interference by one or more of the following measures:

- Reorient or relocate the receiving antenna.
- Increase the separation between the equipment and receiver.
- Connect the equipment into an outlet on a circuit different from that to which the receiver is connected.
- Consult the dealer or an experienced radio technician for help.

1.2 PROPOSITION 65

WARNING: Cancer and Reproductive Harm
www.P65Warnings.ca.gov

WARNING: This product contains or produces a chemical known to the State of California to cause cancer and birth defects (or other reproductive harm).
(California Health and Safety Code §25249.5 et seq.)

1.3 IMPORTANT SAFETY INSTRUCTIONS

WARNING: When using this product, basic precautions should always be followed. Read all instructions before using this product.

1.3.1. CHARGING PRECAUTIONS

1. Charging improperly or at temperatures outside the specified range can damage the battery and increase the risk of fire. **DO NOT** restrict ventilation in any way. When charging the internal battery, work in a well-ventilated area.
2. **DO NOT** leave the Start-All® Jump-Pack unattended while charging the unit.
3. **DO NOT** charge the Start-All® Jump-Pack on any combustible material such as wood, paper, carpet, etc.
4. **DO NOT** attempt to charge the Start-All® Jump-Pack with any third-party wall charger or port charger. Use only the supplied 18VDC 100-240VAC wall charger or 18VDC port charger. Failure to do so may cause an overheat condition and lead to a fire, property damage, or personal injury and/or death.
5. **DO NOT** attempt to start a vehicle while charging the Start-All® Jump-Pack.
6. The Start-All® Jump-Pack should always be charged indoors in a clean, dry environment.

1.3.2. PERSONAL PRECAUTIONS

1. Consider having someone close enough by to come to your aid when you work near a lead acid battery.
2. Have plenty of fresh water and soap nearby in case battery acid contacts skin, clothing, or eyes.
3. Wear complete eye protection and clothing protection. Avoid touching eyes while working near battery.
4. Avoid contact with any liquid ejected from the battery. Liquid ejected from the battery may cause irritation or burns. If battery acid contacts skin or clothing, wash immediately with soap and water. If acid enters eye, immediately flush eye with running cold water for at least ten (10) minutes and get medical attention immediately.
5. **NEVER** smoke or allow a spark or flame in the vicinity of a battery or engine.
6. Be extra cautious to reduce risk of dropping a metal tool onto battery. It might spark or short circuit battery or other electrical part that may cause injury.
7. Remove personal metal items such as rings, bracelets, necklaces, and watches when working with a lead-acid battery. A lead acid battery can produce a short circuit current high enough to weld a ring or the like to metal, causing a severe burn.
8. **Wet Conditions:** When operating outdoors, take proper and appropriate precautions to protect jump packs from wet conditions including but not limited to rain, sleet, and snow.
9. **Accessories.** This product is only approved for use with Vanair® accessories. Vanair® is not responsible for user safety or damage when using accessories not approved by Vanair®.

1.3.3. OPERATING PRECAUTIONS

1. This product is intended for use on vehicles with 12V BATTERY SYSTEMS ONLY.
   DO NOT connect the jumper cables to any vehicle with more than a 12V system. Connecting to 18V, 24V or higher voltage systems could result in fire and/or serious injury or death.
2. This product is compatible with 12V lead-acid batteries.
   DO NOT attempt to use the product with any other type of battery. Jump-starting other battery chemistries may result in injury, death, or property damage. Contact the battery manufacturer prior to attempting to jump-start the battery.
   DO NOT jump-start a battery if you are unsure of the specific chemistry or voltage of the battery.
3. To reduce risk of Injury, close supervision is necessary when the product is near children.
4. Use of attachment not sold alongside power pack may result in risk of fire, electric shock, or injury to person.
5. To reduce risk of damage to the electrical plug and cord, pull the plug rather than the cord when disconnecting the power pack.
6. **DO NOT** put fingers or hands into the product.
7. **DO NOT** use if the Start-All® Jump-Pack or battery is damaged. Damage may include cracks to the casing, cables, power cords, clamps or ports. Damaged or modified batteries may exhibit unpredictable behavior resulting in fire, explosion, or risk of injury.
8. **DO NOT** operate the Start-All® Jump-Pack with a damaged cord or plug, or a damaged output cable.
9. **DO NOT** short circuit the battery terminals or jump cables.
10. **DO NOT** operate the Start-All® Jump-Pack if it becomes wet.
    NOTE: If the unit is already operating and becomes wet, disconnect it from the vehicle battery and discontinue use.

WARNING - RISK OF EXPLOSIVE GASES

- **WORKING IN VICINITY OF A LEAD ACID BATTERY IS DANGEROUS. LEAD-ACID BATTERIES GENERATE EXPLOSIVE GASES DURING NORMAL BATTERY OPERATION. FOR THIS REASON, IT IS OF THE UTMOST IMPORTANCE THAT YOU FOLLOW THE INSTRUCTIONS EACH TIME YOU USE (THE BOOSTER FUNCTION OF) THE POWER PACK.**
- To reduce risk of battery explosion follow these instructions and those published by battery manufacturer and manufacturer of any equipment you intend to use in vicinity of the battery. Review cautionary makings on these products and on engine.

11. **DO NOT** connect the jumper cables to any vehicle with more than a 12V system. Connecting to 18V, 24V or higher voltage systems could result in fire and/or serious injury or death.
12. **DO NOT** attempt to connect this unit to anything other than a 12V battery terminal or dedicated jump lug. Failure to do so could cause permanent damage to the vehicle or jump-starter.
13. **DO NOT** leave the Start-All® Jump-Pack unattended while connected to the vehicle battery or battery posts.
    NOTE: The Start-All® Jump-Pack is not a trickle charger type device and should not be used as such.
14. **DO NOT** attempt more than five (5) consecutive start attempts within a fifteen (15) minute period. Attempting more than the recommended cranks can lead to an overheat condition and may lead to possible fire and property damage as well as injury and death.

15. **DO NOT** use this unit if it becomes excessively hot, emits an odor, is deformed, cut, is experiencing or demonstrating an abnormal occurrence. DISCONTINUE USE IMMEDIATELY and move unit to a safe location away from ALL potential flammable and combustible materials and contact Vanair®.

16. **DO NOT** crank the vehicle for more than fifteen (15) seconds when attempting to start utilizing the Start-All® Jump-Pack. Wait ninety (90) seconds between cranking attempts. Exceeding fifteen (15) seconds on a crank attempt or failing to wait ninety (90) seconds may cause damage to the vehicle starter and or the Start-All® Jump-Pack.

17. **DO NOT** expose the Start-All® Jump-Pack to fire or excessive temperature (above 265˚F [130˚C]) may cause explosion.

WARNING - RISK OF ELECTRIC SHOCK

18. **DO NOT** use power pack to supply power tools to cut or access to live parts or live wirings, or materials that may contain live parts or live wirings inside, such as building walls, etc.

19. **DO NOT** attempt to use the Start-All® Jump-Pack in any fashion other than indicated within this manual. Failure to do so could cause permanent damage, disfigurement, and/or death. Always wear proper Personal Protection Equipment (PPE) when using this device.

20. **DO NOT** attempt to disassemble, alter, modify, or repair any part of the product. Incorrect disassembly and reassembly may result in a risk of fire, electric shock, or may cause injury, death, or damage to property. Contact Vanair® to direct service or repair with a qualified service person.

SECTION 2: FEATURES AND CAPABILITIES

2.1 PRODUCT FEATURES

2.1.1. VEHICLE JUMP-STARTING

The 5000A Start-All® Jump-Pack is engineered to jump-start 12V gasoline and diesel engines up to 10L.

2.1.2. CHARGING ELECTRONICS

The 5000A Start-All® Jump-Pack features USB outlets for charging phones, cameras, tablets, and gaming devices. It is equipped with a convenient AC outlet, making it easy to power laptops, tools, and essential medical equipment such as CPAP machines.

2.1.3. ACCESSORIES

The 5000A Start-All® Jump-Pack includes an 18VDC 100-240VAC wall charger, 18VDC port charger, 3-in-1 cord with USB lightning®, USB-C, and micro-USB connectors, safety strap, carabiner and clip.

2.1.4. LED EMERGENCY LIGHT

The 5000A Start-All® Jump-Pack includes a powerful built-in 500-lumen LED emergency strobe light with high, low, and SOS emergency strobe functions for emergency use.

2.2 TECHNICAL SPECIFICATIONS

Unit Dimensions: 10.77" L x 4.35" W x 10.94" H

Unit Weight: 9.8lbs. (4.44kg)

Battery type: Lithium-Ion Cobalt

Capacity: 118.4 Watt-hours (118,400mWh)

Peak Current: 5,000A (<200ms)

Output voltage: 14.8VDC

Output Ports:

- (2) USB Ports - 5V 2.1A
- (1) USB-C Port - 5V/3A, 9V/3A, 12V/2.5A, PPS 3-11V
- (2) Aux Ports - 12VDC 10A

Input Charging Port:

- (1) 5.5mm Port - 18VDC 2A

Light: 500-lumen LED emergency light with high, low, and SOS emergency strobe functions.

Storage Temp: 40-75°F (4-24°C)

Estimated Lifetime Jump-Starts: up to 5000 starts

AC Recharging: 18VDC 100-240VAC wall charger. Full charge takes approximately eight (8) hours.

2.3 HANDLING INSTRUCTIONS

Handle product with care as the product can become damaged if impacted. Store indoors and only operate the product in dry locations.

1. **DO NOT** use a damaged product, including, but not limited to cracks to the casing or damaged cables.
2. **DO NOT** use the product with a damaged power cord.
3. **DO NOT** handle the product or any electrical components near any liquid. Humidity and liquids may damage the product.
4. **DO NOT** operate the product if it becomes wet. If the product is already operating and becomes wet, disconnect it from the battery and discontinue use immediately.
5. **DO NOT** disconnect the product by pulling on the cables.

2.4 STORAGE INSTRUCTIONS

Store your product in a dry, indoors location. The optimal storage temperature is 40-75°F (4-24°C).

When the Start-All® Jump-Pack is not in use, keep it away from other metal objects, like paper clips, coins, keys, nails, screws or other small metal objects that can make a connection from one terminal to another. Shorting the battery terminals together can cause burns or a fire.

1. **DO NOT** expose the Start-All® Jump-Pack to excessive temperature. Extreme temperatures may damage the product.
2. **DO NOT** use or store your product in areas with high concentrations of dust or airborne materials. Store your product on flat; secure surfaces so it is not prone to falling.
3. **DO NOT** use the product with a low or dead battery.
4. **NOTE:** To maximize battery capacity and capability while protecting the battery from damage, the Start-All® Jump-Pack **MUST BE STORED** at a 40% or higher battery charge level and **CHARGED AT LEAST** once every six (6) months. Failure to properly store the product may result in damage and void the warranty.

SECTION 3: OPERATION

3.1 GENERAL INSTRUCTIONS

Before operating the Start-All® Jump-Pack, please read the entire instruction manual to understand hazards and safety instructions associated with this product. Review all cautionary markings on this product and in this manual and wear required PPE while operating.

There are variables such as extreme outdoor temperatures and truck mechanical issues (bad starter, no fuel, or other engine problems) that may limit the ability of Start-All® Jump-Pack to start an engine.
The Start-All® Jump-Pack is designed to instantaneously start a vehicle battery in a low voltage condition of 5V or higher.

Your Start-All® Jump-Pack is fitted with built-in Protect-All® Safety Technology that monitors and controls the unit. To ensure product longevity, activation is limited to forty-five (45) second intervals. If you experience the unit timing out during a jump-start, simply cycle the main "ON/OFF" rocker switch to reactivate the jump-start function.

Operating Temperature. The unit can be operated in temperatures between -4-140°F (-20-60°C).

DO NOT operate outside of this temperature range.

Battery Charging. The Start-All® Jump-Pack is supplied with a 18VDC 100-240VAC wall charger and 18VDC port charger. Make sure the charging cable is securely plugged into the charging port before plugging it into a 12VDC accessory port or AC outlet.

DO NOT leave the Start-All® Jump-Pack unattended while charging.

DO NOT charge the unit on any material that is flammable, such as wood, carpet, etc.

DO NOT use this unit to start a vehicle while this unit is charging.

DO NOT use third party charging cables. Charge the Start-All® Jump-Pack only with Vanair® supplied charging cables.

DO NOT use the Start-All® Jump-Pack charging cables with any other third-party devices. The use of a 3rd party charging cord may cause overheating conditions and may lead to possible fire and property damage.

NOTE: Fully charge the unit immediately upon initial receipt and fully charge unit after each use.

3.2 BACK OF UNIT

To use the light, press and hold the button until it turns on. Press the button again to cycle through the modes.

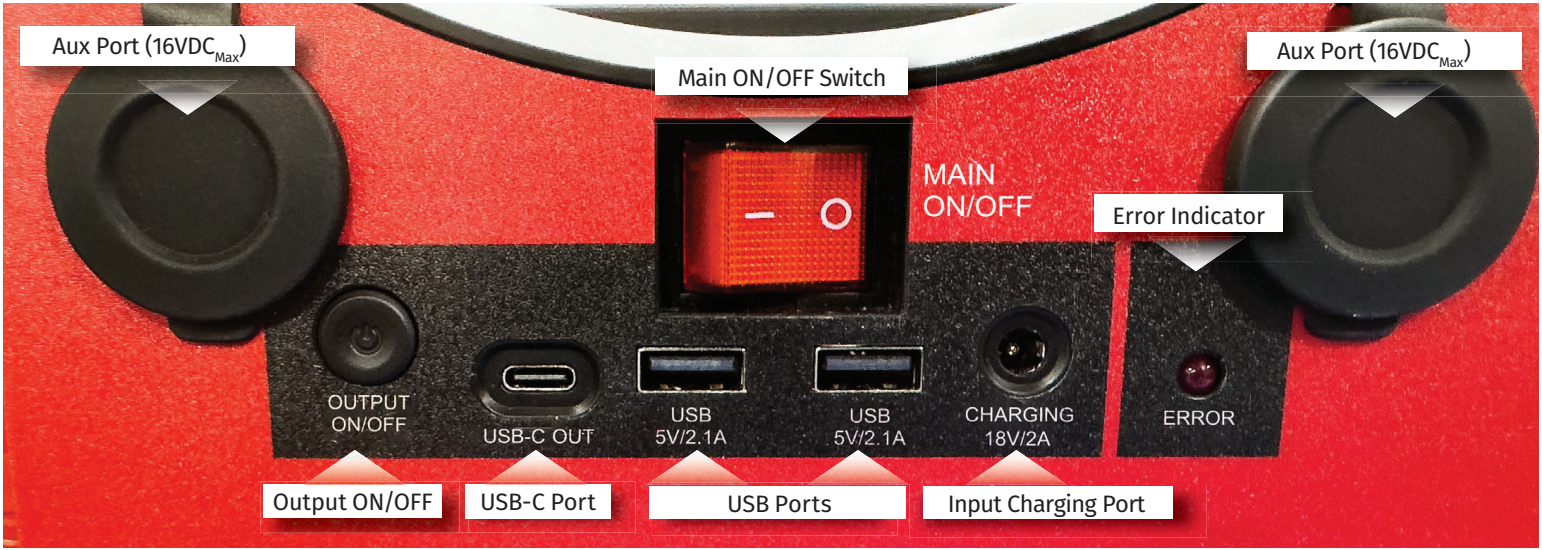

3.3 CONTROL PANEL

1. **Main ON/OFF Switch.** Illuminates when the unit is on.
   NOTE: The LED display and ON/OFF switch will time out after 5 minutes. To reactivate, toggle the MAIN ON/OFF switch and depress the OUTPUT ON/OFF switch.
2. **Aux Ports.** Press and hold the OUTPUT ON/OFF button until it beeps and the "16V" indicator lights on the LED display.
3. **Error Indicator.** A solid red error light indicates an error that needs to be addressed.
   NOTE: This indicator and Red "E" followed by a number on LED display are lit simultaneously.
4. **Output ON/OFF.** Turns power ON/OFF to auxiliary output ports.
5. **USB-C Port.** Output to operate, or charge USB-C capable accessories.
6. **USB Ports.** Operate or charge 5VDC USB accessories (2.1A$_{max}$).
7. **Wall Charger Input.** Charge your Start-All® Jump-Pack via the supplied wall charger or port charger.

3.4 LED DISPLAY

1. **PERCENTAGE CHARGED.** Displays the Start-All® Jump-Pack's percentage charge, error codes, or when a USB port is first used and the USB amperes draw is displayed.
2. **CHARGING FLASHES.** The "IN" indicator flashes whenever the unit is being charged by the 18VDC 100-240VAC wall charger or the 18VDC port charger.
3. **DC AUX OUT.** Press the OUTPUT 12V ON/OFF button until it beeps and the 12VDC indicator lights up on the LED display. Displays when a DC auxiliary port is activated and the OUTPUT switch is ON.
4. **AC POWER OUTPUT.** Press the ON/OFF button until it beeps and the "OUT" when you are using the unit to power an accessory via the 120VAC outlet.
5. **USB AMPERES DRAWN.** The USB amperes drawn displays for two (2) seconds whenever an accessory is attached to either of the USB ports. The USB ports combined maximum load is 2.1A.
6. **USB POWER OUTPUT.** The "5V 2.1A" display goes from blue to green whenever a USB port is used to charge or power a USB accessory using any of the four (4) USB ports.

NOTE: USB amperes only shows for two (2) seconds before the LED display returns to displaying the percentage of charge.

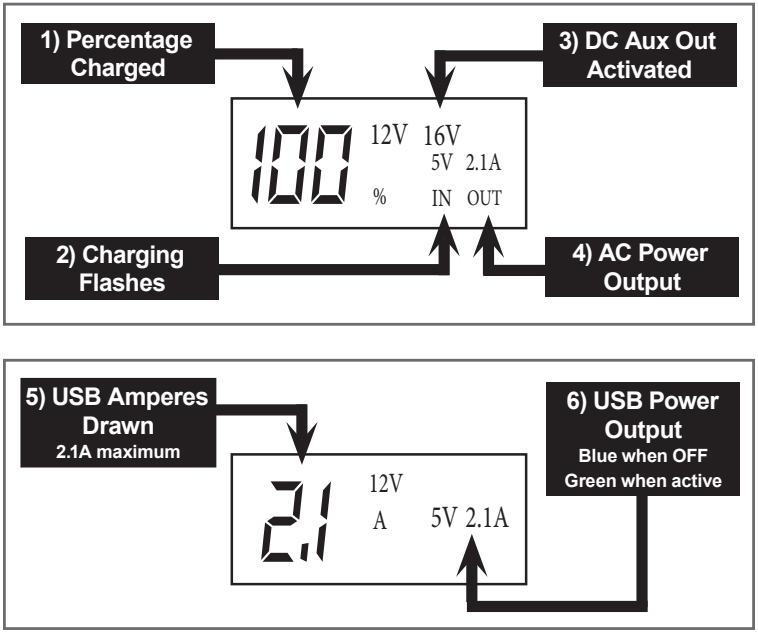

Figure 3-1: LED Display

3.5 LED INDICATORS

Normal Screen

Normal ON/OFF screen. Displays the battery charge percentage.
0-64% will display in red. 65-100% will display in green.

Red "IN" Symbol Flashing

The "IN" will turn solid when charging is complete.

Start-All® Jump-Pack Activated and Connected

Indicates the vehicle is ready to be jump-started.

Nothing Displayed in Window?

Sleep mode, press ON/OFF output button to wake up then cycle the master ON/OFF switch.

Search Mode

The unit is searching for a battery and current in order to activate the jump-starting.

3.6 OPERATING PROCEDURE

3.6.1. PERSONAL SAFETY AND BATTERY PREPARATION

1. Wear required PPE (complete eye protection and protective clothing) when jump-starting any vehicle. Remove personal metal items such as watches, rings, and bracelets when working with a lead-acid battery as it may cause personal injury.
2. Please refer to the owner's manual for the vehicle for proper jump-start connection location and procedure.
3. Identify the positive **RED (+)** and negative **BLACK (-)** terminals of the battery before connecting the clamps. Make sure battery terminals are clean and free of debris for safe connection.

3.6.2. START-ALL® JUMP-PACK PREPARATION

1. Secure the Start-All® Jump-Pack by inserting the safety strap through the handle and securely attaching it to the vehicle using the included carabiner clip.
2. Place the Start-All® Jump-Pack on a flat surface and turn the MAIN ON/OFF to the "ON" position, ensuring that the Start-All® Jump-Pack has at least a 65% charge for heavy vehicles, or a 50% charge level for light vehicles.

3.6.3. MAKE THE CONNECTION

1. Disconnect the **RED (+)** clamp and the **BLACK (-)** clamp from the Start-All® Jump-Pack docking station.
   NOTE: LED should be flashing red and green "8's" (indicates unit is searching for a battery).
2. If your vehicle is equipped with jump posts, connect the **RED (+)** clamp to the positive jump post. Connect the **BLACK (-)** clamp to the vehicle ground or grounding lug. Otherwise, connections will be made on the battery.
3. If connections are made on the battery, connect the **RED (+)** clamp to the positive terminal on the battery first, then connect the **BLACK (-)** clamp to the negative terminal on the battery. Once the battery is detected and is connected correctly, the LED indicator will show a solid green "8". Once the "8" is a solid green, you must attempt to start the vehicle within forty-five (45) seconds or the Start-All® Jump-Pack will time out. If a time out occurs, you must turn off the unit and repeat the process.

3.6.4. START THE VEHICLE

1. Ensure a secure and proper connection. If properly connected, the unit will display a green "8" on the LED. If the LED displays a red "E" followed by a number, then there is an error that needs to be addressed. Please refer the ***Section 3.7*** for guidance.
2. Turn the ignition key to the ON position and start the engine.
3. **DO NOT** crank a dead vehicle for more than fifteen (15) seconds. Failure to do so will cause damage to the vehicle's starter and/or the Start-All® Jump-Pack. Repeated attempts may lead to possible fire and/or property damage.
   NOTE: If an "E5" error is triggered, please refer the ***Section 3.7*** for guidance.
4. Once the vehicle is started, turn off the unit and disconnect the **BLACK (-)** clamp first from the vehicle. Disconnect the **RED (+)** clamp and reattach the clamps to the docking station.
   NOTE: Be sure to turn off the unit.

3.7 ERROR CODE INDICATORS

E0 - Low Battery Voltage
Low Battery Voltage protection activated. If the Start-All® Jump-Pack is below 35% when turned on and connected to a vehicle, fully recharge the unit then try again. If “E0” is displayed while charging the Start-All® Jump-Pack, the battery is below a safe voltage to charge. Disconnect the charger and contact customer care: 844-VAN-SERV.

E1 - Reverse Polarity
Reverse polarity protection activated. Turn off the Start-All® Jump-Pack. Check the clamp connections. Make sure the red clamp goes to positive and the black clamp goes to negative, then try again.

E2 - Timed Out
The Start-All® Jump-Pack will time out after forty-five (45) seconds when connected to a vehicle and is activated. Turn the Start-All® Jump-Pack off and then back on.

E3 - High Temperature
High temperature protection activated. Turn off the Start-All® Jump-Pack, and wait for it to cool down before using again.

E4 - Low Temperature
The Start-All® Jump-Pack is below optimal operating temperature. Performance may be decreased. If unable to start vehicle, warm up the Start-All® Jump-Pack and try again.

E5 - High Current
High current protection activated. The vehicle’s power requirements may exceed safe operating threshold of the Start-All® Jump-Pack or three high-current vehicle start attempts detected within a five (5) minute span.
Wait fifteen (15) minutes before using again.

E6 - Low Current
Low current protection activated. Turn off the Start-All® Jump-Pack. Check the clamp connection on the battery, make sure it is clean and free of paint or corrosion, then try again. If this error persists, turn on the vehicle’s headlights or blower fan then try again.

E7 - Short Circuit
Short circuit protection activated. Turn off the Start-All® Jump-Pack, check the clamp connections to make sure that there is not a short circuit, then try again.

E8 - Unit is Not Activating
Contact customer care: 844-VAN-SERV

E9 - High Battery Voltage
The battery is above normal maximum voltage.
Do not attempt to use.
Contact customer care: 844-VAN-SERV

SECTION 4: TROUBLESHOOTING AND MAINTENANCE

DO NOT attempt to disassemble, alter, modify, or repair any part of the product. Incorrect disassembly and reassembly may result in a risk of fire, electric shock, or may cause injury, death, or damage to property. Contact Vanair® to direct service or repair with a qualified service person.

Cleaning. Power off the product before attempting any upkeep or cleaning. Make sure that the terminals are free of plastic caps, paint, rust, dirt, or grease that can hinder the connection. Clean and dry product immediately if it encounters liquid or any type of contaminant by using a soft, lint-free microfiber cloth. Avoid getting moisture in any openings.

4.1 TROUBLESHOOTING GUIDE

1. **Is the Start-All® Jump-Pack charged?**
   - Make sure the unit has at least 50% charge before using. If the Start-All® Jump-Pack is below 35%, it will cause an "E0" error to be displayed.
2. **Start-All® Jump-Pack MAIN ON/OFF**
   - Ensure that the MAIN ON/OFF power switch is in the "ON" position.
3. **Activation LED indicator "8's"?**
   - Is the LED blinking red to green or is it a solid red or green? Solid green "8" indicates a correct connection and a solid red "E" followed by a number is an error. No current will flow to the battery when there is an error, except for "E4" (Low Temperature).
4. **Alternating red and green "8"s**
   - The unit will flash red and green "8's" while it is searching for a battery to connect to. If the amps are too low or the connection is poor, the unit may not connect. Make sure that the connection is clean and put the vehicle ignition switch into the accessory (ACC) position with the headlights or radio turned on.
5. **Cable alarm?**
   - A red "E" followed by a number and beeping is an error code. Immediately disconnect the clamps, then refer to ***Section 3.7***.
6. **Key position?**
   - Put the ignition switch into the accessory (ACC) position to help activate the unit.
7. **Can't get the Start-All® Jump-Pack to connect?**

If the Start-All® Jump-Pack does not show a green "8" when connected to a dead vehicle:

- Make sure to turn on the Start-All® Jump-Pack before connecting to the dead vehicle.
- Verify the clamps are connected properly.
- Turn on lights or the radio.
- Verify that the dead vehicle is a 12V system.
- Verify that the Start-All® Jump-Pack is adequately charged.

If those steps do not resolve the problem, you may manually activate the system utilizing the procedure in ***Section 4.2***.

4.2 MANUAL ACTIVATION FOR LOW VOLTAGE BATTERIES

WARNING! USE "MANUAL ACTIVATION" MODE WITH EXTREME CARE. MANUAL ACTIVATION DISABLES SOME SAFETY FEATURES.

The Start-All® Jump-Pack is designed to jump-start 12V lead-acid batteries at very low voltage. If your battery is too low or unable to take a charge, the unit will display alternating red and green "8's". This is an indication that the Start-All® Jump-Pack cannot detect a battery. If you need to jump-start a battery in this condition, turn on the headlights, blower, and/or another accessory. If the Start-All® Jump-Pack still does not activate, the "manual activation" feature allows to force "ON" the jump-start function.

Pay close attention to the polarity of the battery before using this mode. Do not allow the positive and negative battery clamps touch or connect as the product will generate sparks. This mode uses a very high current (up to 5,000A) that can cause sparks and high heat if not used properly. If you are unsure about using this mode, do not attempt and seek trained help.

WARNING! TURN OFF THE START-ALL® JUMP-PACK BEFORE DISCONNECTING THE BATTERY CLAMPS.

Turning off the unit before disconnecting the battery clamps will ensure your safety. Both the "spark proof" and "reverse polarity protection" features are disabled in "manual activation" mode.

1. **Automatic transmission?**
   - For automatic transmissions only, make sure the truck is in the neutral/park position.
2. **Manual disconnect switch (truck option)**
   - Turn the vehicle's manual disconnect switch "ON". Location of disconnect switch varies by truck manufacturer.
3. **Clean terminals?**
   - Make sure that the terminals are free of plastic caps, paint, rust, dirt, or grease that can hinder the connection.
4. **Jump-start port?**
   - Does your truck have a jump-start port connection? If so, use the starting port before attempting to connect directly to the battery.
5. **Battery will not hold a charge?**
   - It is possible the lead-acid battery is sulfated causing shorting of the internal components and will need to be replaced. Sulfated batteries cannot be charged or jump-started.
6. **Battery dead?**
   - If the lead acid battery is completely dead, it will show voltage below 5V. In this situation, the battery is fully depleted and will not activate. The battery will need to be replaced.

4.3 WARRANTY STATEMENT

Start-All® Jump-Packs are warranted from the date of purchase at retail against failure due to defective material and/or workmanship for a period of one (1) year. For full terms and conditions, visit Vanair.com.

All returns must receive a Return Material Authorization (RMA) number from the factory and be returned directly postage or freight prepaid. See RMA for instructions regarding the shipping of products containing Lithium Batteries.

Start-All® Jump-Packs contain a fully regulated lithium-ion battery as classified by UN3481.

DO NOT SHIP LITHIUM BATTERIES VIA AIR FREIGHT.
All US Department of Transportation regulations regarding the shipment of lithium-ion batteries must be followed.

Warranty for the Start-All® Jump-Pack is one-year from date of retail purchase. Start-All® Jump-Pack MUST be registered online at:

https://vanair.com/lifetime-warranty-product-registration/#start-all-jump-pack-registration

Customer must provide dated proof of purchase to be eligible for warranty. Contact the manufacturer directly for instructions at (800) 526-8817.

REGISTER YOUR PRODUCT HERE

START·ALL JUMP·PACK
5000A • 66600 joules 5S • 12V

(844) VAN-SERV • SERVICE@(844) VAN-SERV • SERVICE@VANAIR.COM • PARTS@VANAIR.COM
1625 E. 2ND STREET • MICHIGAN CITY, IN 46360 • (800) 526-8817 • VANAIR.COM

BLANK PAGE

Goodall®
By VANAIR®

We Start Engines®

Date of Publication: 06/12/26

PN: 090165_r10

VANLINK®

Scan code for instant access to your **manual** and product details

282373_r2_JP-12-5000