Now Available Through Vanair® Dealers
VANAIR
A Lincoln Electric Company
+1-800-526-8817 | vanair.com

VELION™

50kW DC FAST CHARGER

Shown: 50kW Mobile K5765-1-W-X-M-W-R

BIG POWER. SMALL FOOTPRINT. TOTAL FLEXIBILITY.

The Velion™ 50kW Mobile DC Fast Charger is a versatile solution engineered for uptime, built for mobility, and backed by unmatched support. With scalable power output, rugged design options, and plug-and-play simplicity, Velion delivers reliable charging wherever you need it, minimizing the delays and costs of traditional infrastructure. Whether you're servicing vehicles, managing a fleet, or supporting dealership operations, Velion delivers unmatched flexibility without sacrificing performance.

Charging Type »
DC Fast Charging

DC Output Voltage »
200-1000V DC

DC Output Current »
Up to 130A

DC Output Power »
Single 50kW Module

Input Voltage »
480VAC +/- 10% (60Hz), 3-Phase (no neutral)

Part Number »
50kW Mobile
K5765-1-W-X-M-W-R

50kW Mobile with Roll Cage
K5765-1-W-X-M-WC-R

50kW Mobile, CCS1 15 ft. One-Pak
K6021-1

50kW Mobile, CCS1 25 ft. One-Pak
K6021-2

50kW Mobile with Roll-Cage, CCS1 15 ft. One-Pak
K6022-1

50kW Mobile with Roll-Cage, CCS1 25 ft. One-Pak
K6022-2

Publication E17.04 | Issue Date 08/25
© Lincoln Global Inc. All Rights Reserved
www.lincolnelectric.com/automation

KEY FEATURES

- **Versatility Without Compromise**
  Designed to adapt to any environment, from dealership service bays to rugged construction sites, this mobile charger delivers unmatched flexibility without sacrificing performance.

- **Engineered for Uptime**
  Downtime isn't an option. Velion is built for durability and reliability with American-made quality and weather-ready components.

- **Compact Powerhouse**
  Velion delivers 50kW of fast charging in a compact, mobile design that fits where others can't.

- **Support That Goes the Distance**
  With an industry-leading 3-year standard warranty and a nationwide service network, with Velion, you're never on your own.

KEY CONTROLS

1. Handle
2. Lifting eye-hook
3. End session control
4. Output power limit selection (12.5kW, 25kW, 50kW)
5. Power module and Coordinator status lights
6. Cable hanger
7. Charge status lights*See below chart for indicators
8. Input power connection
9. CCS1 or NACS connection
10. On/Off switch
11. Emergency stop
12. Ethernet connection
13. USB

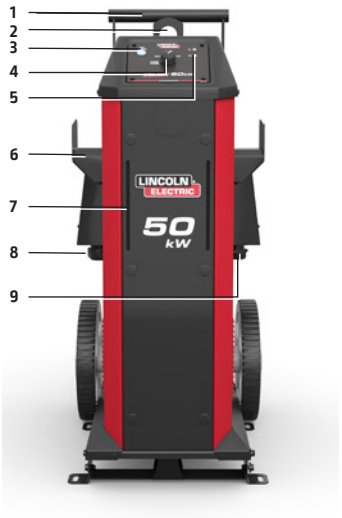

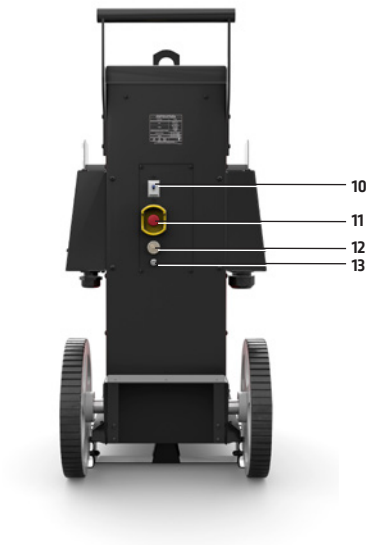

CHARGE STATUS LIGHT INDICATORS

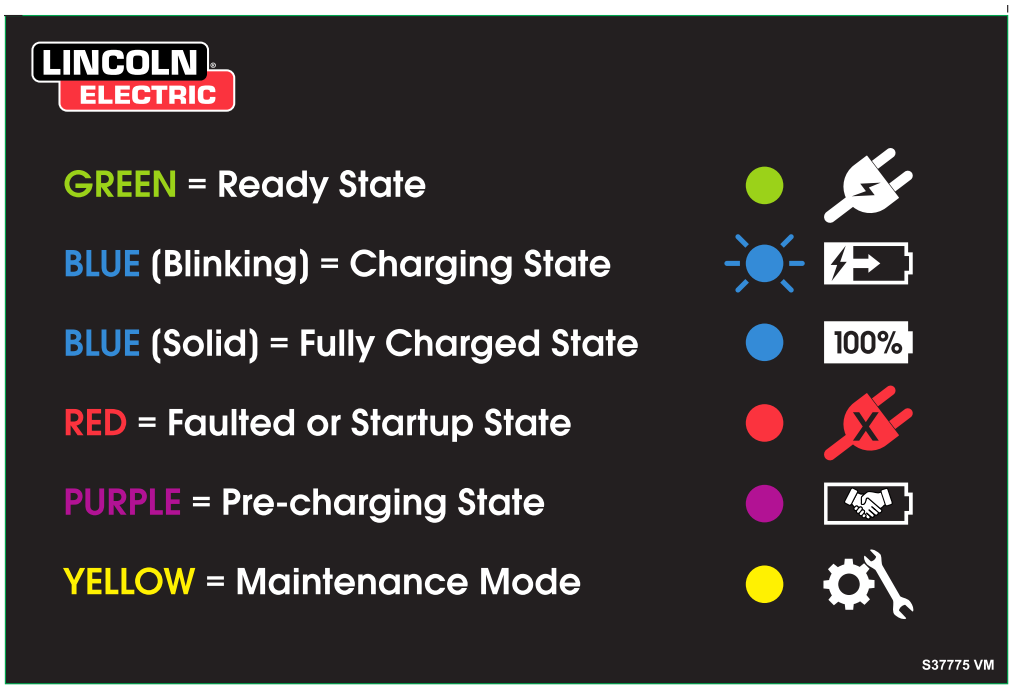

50kW CHARGER

Product Code	Series	Input Connection	RFID	User Interface	Accessories	Color	Part Number	Description
		Input cable 25 ft = W	No RFID Reader = X RFID Reader = R	Manual Push Buttons = M	Wheel Kit = W Wheels/Cage = WC	Red = R		
K5765	-1	W	X	M	W	R	K5765-1-W-X-M-W-R	50kW Mobile, 25 ft input cable, no RFID, Manual, Wheels
					WC	R	K5765-1-W-X-M-WC-R	50kW Mobile, 25 ft input cable, no RFID, Manual, Wheels & Roll Cage

CABLES (SOLD SEPARATELY)

Product Code	Series	Connector Type	Cable Length	Part Number	Description
		CCS1 =C NACS=N	15 ft = -15 25 ft = -25		
K5814	-1	C	15	K5814-1-C-15	15 ft CCS1 Connector
		C	25	K5814-1-C-25	25 ft CCS1 Connector
		N	15	K5814-1-N-15	15 ft NACS Connector
		N	25	K5814-1-N-25	25 ft NACS Connector

ONE-PAKS

Product Name	Part Number	What's Included
50kW Mobile, CCS1 15 ft One-Pak	K6021-1	50kW Mobile, wheels, 25 ft input power cable, CCS1 15 ft cable
50kW Mobile, CCS1 25 ft One-Pak	K6021-2	50kW Mobile, wheels , 25 ft input power cable, CCS1 25 ft cable
50kW Mobile with Roll-cage, CCS1 15 ft One-Pak	K6022-1	50kW Mobile, wheels, with roll-cage, 25 ft input power cord, CCS1 15 ft cable
50kW Mobile with Roll-cage, CCS1 25 ft One-Pak	K6022-2	50kW Mobile, wheels, with Roll-cage, 25 ft input power cord, CCS1 25 ft cable

TECHNICAL SPECIFICATIONS*

Charging Station	
Charging Type	Level 3, DC Fast Charging
Input Voltage	480VAC +/- 10% (60Hz), 3-Phase, Protective Earth (UL Model), (no neutral)
Input Current	up to 65A
DC Output Voltage	200-1000V DC
Output Current	up to 130A
DC Output Power (max)	12.5kW, 25kW, 50kW
Efficiency (full-load)	>95%
Power Factor (full-load)	>0.99
THDi	<5%
Enclosure Rating	NEMA 3R
IK Rating	IK08
Operating Temperature	-30°C to +50°C, derating above 40°C
Humidity	20 - 95% Rh non-condensing
Dimensions (no roll-cage) (mm)	48 in x 22 in x 26 in (1219 x 559 x 660)
Dimensions (roll-cage) (mm)	50 in x 26 in x 30 in (1270 x 660 x 762)
Weight (kg) without roll-cage	315 lbs (143 kg)
Weight (kg) with roll-cage	375 lbs (170 kg)
Overvoltage Category	III
Protection	Overcurrent, Overvoltage, Ground, Fault, Overtemp, Short Circuit, Insulation Monitor, Surge
Outlet Type	Insulation Monitor, Surge
Wifi	802.11 b/g/n (2.4/5 GHz)
Network Connection	GSM/3G/4G modem;10/100 Base-T Ethernet
Communication	OCPP 2.0.1 and 1.6
Authentication	RFID
Cable Length	15 ft or 25 ft (4.5 m or 7.6 m)

System Certification Standards	
Charging System	UL2202, UL2231-1 & 2, SAEJ1772, SAEJ2894,0 SAEJ3400, EMC Class A, FCC Part 15
Communication to the EV	DIN SPEC 70121, ISO15118-1,2,3,4 & 5

*Product specifications and features are subject to change.
Confirm specification prior to purchase.

Power Curve – 50kW

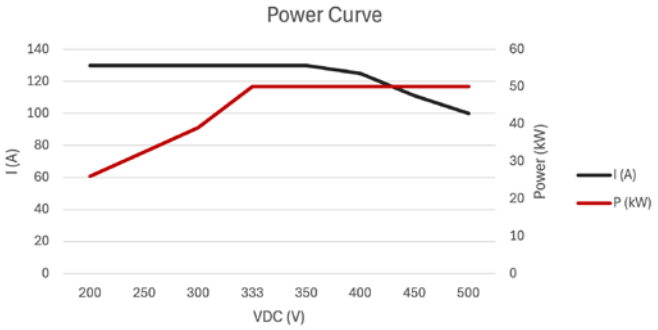

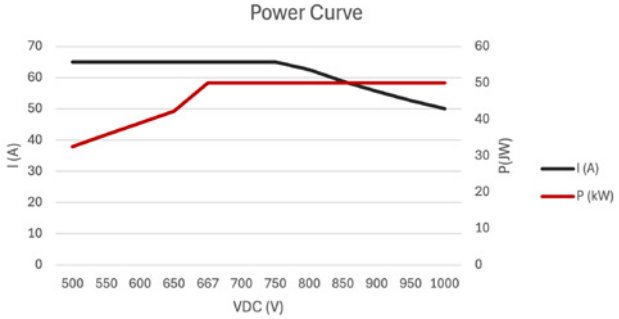

Power Curve – Power Limited 25kW

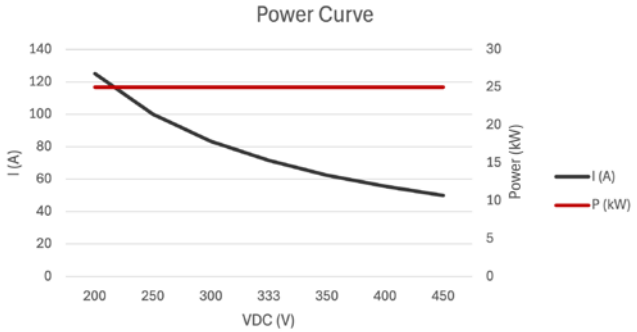

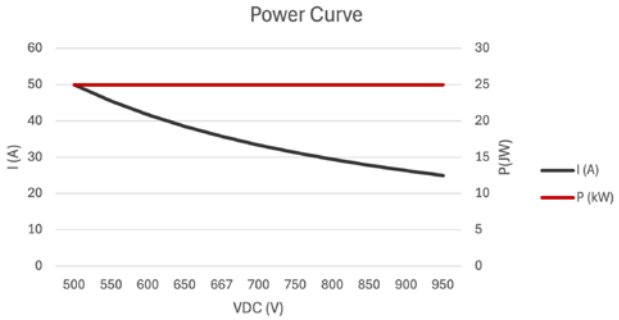

Power Curve – Power Limited 12.5kW

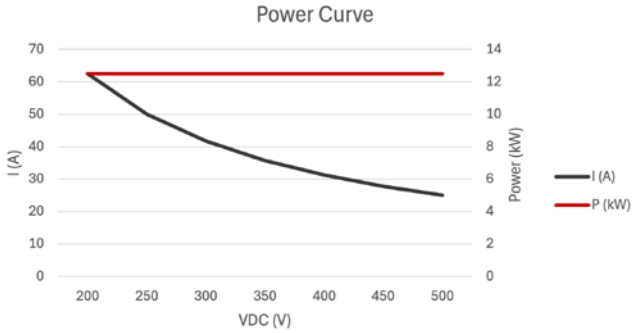

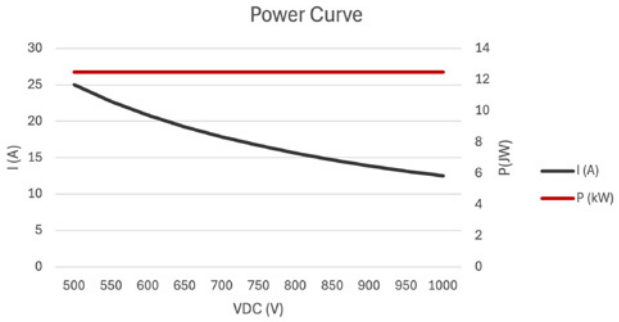

CUSTOMER ASSISTANCE POLICY

The business of Lincoln Electric is manufacturing and selling high quality welding equipment, automated welding systems, consumables, cutting equipment and EV charging systems. Our challenge is to meet the needs of our customers, who are experts in their fields, and to exceed their expectations. On occasion, purchasers may ask Lincoln Electric for information or technical information about their use of our products. Our employees respond to inquiries to the best of their ability based on information and specifications provided to them by the customers and the knowledge they may have concerning the application. Our employees, however, are not in a position to verify the information provided or to evaluate the engineering requirements for the particular weldment, or to provide engineering advice in relation to a specific situation or application. Accordingly, Lincoln Electric does not warrant or guarantee or assume any liability with respect to such information or communications. Moreover, the provision of such information or technical information does not create, expand, or alter any warranty on our products. Any express or implied warranty that might arise from the information or technical information, including any implied warranty of merchantability or any warranty of fitness for any customers' particular purpose or any other equivalent or similar warranty is specifically disclaimed.

Lincoln Electric is a responsive manufacturer, but the definition of specifications, and the selection and use of specific products sold by Lincoln Electric is solely within the control of, and remains the sole responsibility of the customer. Many variables beyond the control of Lincoln Electric affect the results obtained in applying these types of fabrication methods and service requirements.