Now Available Through Vanair® Dealers
VANAIR
A Lincoln Electric Company
+1-800-526-8817 | vanair.com

RANGER® AIR 330MPX™

Multi-Function Engine Drive

Shown:
Ranger Air 330MPX (K5239-1)
with Included Basic Stop/Start Remote Fob

Versatility With Unparalleled Performance

The Ranger Air 330MPX multi-function engine drive was designed for the operator who faces the unexpected every day.

VERSATILITY

5 key functionalities in one compact unit:

- Air Compressor
- Generator
- Battery Jump Assist
- Battery Charge
- Multi-Process Welder

INDUSTRY LEADING PERFORMANCE

Top-tier performance across the board for:

- Air Compressor Capabilities
- Clean Auxiliary Power
- Arc Performance

LOWER COST OF OWNERSHIP

Integrated technology helps lower fuel and maintenance costs:

- Variable Engine Speed
- Auto Stop/Start

Processes »
Stick, MIG, TIG, Flux-Cored & Gouging

Output »
CC CV | DC | 11.5P kW

Input »

Applications »
Construction
Maintenance & Repair
Service Truck
Rental
Pipeline Welding

Product Number »
K5239-1 Ranger Air 330MPX

3 YEAR WARRANTY
AÑOS DE GARANTÍA
ANS DE GARANTIE

Publication E6.600.1 | Issue Date 07/25
© Lincoln Global Inc. All Rights Reserved All trademarks and registered trademarks are the property of their respective owners.
www.lincolnelectric.com

LINCOLN ELECTRIC

KEY FEATURES

- **Be Ready for any Challenge -** Multi-Function capabilities allow operators to take on a variety of projects
- **Free Up Space and Increase Available Payload** - Compact design allows for additional tools and equipment
- **Save Time** - Digital user interface makes setup quick and easy
- **Tackle Welding with Ease** with integrated Ready. Set. Weld.® and Chopper Technology®
- **Avoid Costly Repairs** - Maintenance alerts notify operator when service is needed
- **Save Money** - Variable Engine Speed and Auto Stop/Start technology help lower fuel and maintenance costs

KEY FUNCTIONALITIES

AIR COMPRESSOR

The Vanair® rotary screw air compressor delivers instant 40CFM @150 PSI, generating up to 30% more air power compared to other machines in its class. Operators can power large tools – up to a 1-inch impact wrench, and inflate tires faster to complete jobs in less time.

GENERATOR

10KW of clean continuous AC generator power accommodates a variety of tools and equipment, allows you to power tools while welding and with less than 5% total harmonic distortion (THD) you can operate sensitive electronics, like laptops.

BATTERY JUMP ASSIST AND BATTERY CHARGE

Capability to jump and charge 12V and 24V batteries on the jobsite. Get equipment started and keep productivity high with 330A for cold cranking assist.

MULTI-PROCESS WELDER

Stick, TIG, MIG, Flux-Cored and direct connect spool gun with a 330A/28V/100% duty cycle so the operator can tackle a variety of applications.

ADVANCED WELD MODES

Gouge, pipe, pulsed TIG and pulsed spool gun modes give the operator more control and flexibility when taking on welding jobs.

RANGER AIR REMOTE PANELS

Increase jobsite safety and efficiency by limiting climbing in and out of the truck bed. With simple and easy installation, operators can choose between three remote panel options or use the machine standalone, offering more flexibility compared to other machines in its class.

User Interface Panel
*User Interface Remote Cable Required. Sold Separately K5643-X

Weld and Battery Panel
*Weld and Battery Remote Cable Required. Sold Separately K5645-X

Auxiliary Power Panel
Appropriate Power Cable Required

Product Number	Description	Size
K5642-1[1]	User Interface - Remote Panel	12.0 x 5.3 x 8.0 IN (304 x 135 x 203 mm)
K5641-1	Weld & Battery Assist Output - Remote Panel	9.3 x 5.7 x 5.8 IN(236 x 145 x 147 mm)
K5640-1	Auxiliary Power - Remote Panel	8.2 x 5.3 x 7.0 IN(208 x 135 x 178 mm)
K5643-10, -20, -30	User Interface Remote Cable	10ft. 20ft. 30ft.
K5645-10, -20, -30	Weld and Battery Remote Cable	10ft. 20ft. 30ft

(1) Important: Some assembly required. The digital User Interface (UI) display is not included with this remote panel. Instead, this panel comes as a flat, graphic-only placeholder. You are responsible for removing the UI from your Ranger® Air machine and mounting it onto the remote panel using the provided instructions. This placeholder must then be installed on your 5-in-1 welder/generator. Improper installation may void warranty.

INNOVATIVE USER INTERFACE

1. Air Compressor Status
2. Weld Mode
3. Remote and Fault Status
4. Fuel Gauge
5. Home Button
6. Local/Remote Button
7. Air Compressor On/Off Button
8. Amps
9. Output
10. Back Button
11. Help Button
12. Engine On/Off Button

INNOVATIVE USER INTERFACE

Ready.Set.Weld technology simplifies setup by recommending optimal welding parameters for a given welding procedure. Just follow the 5-step process and enter the requested information to obtain recommended settings: 1) Process, 2) Electrode Type, 3) Electrode Diameter, 4) Plate Thickness, 5) Polarity.

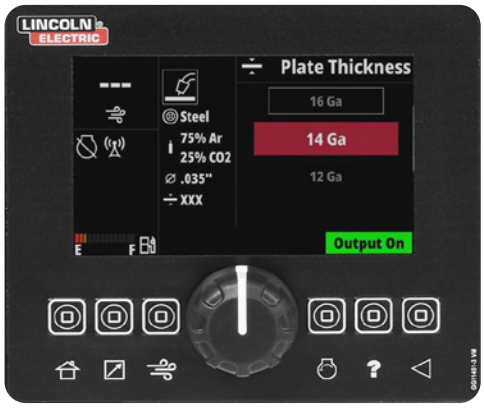

Maintenance Alerts keep track of engine functions and provide real-time data and notifications when service is required. The maintenance screen clearly displays hours remaining, and settings can be customized to issue alerts at preferred intervals.

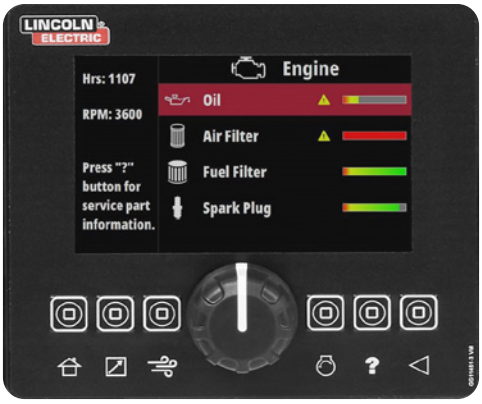

CrossLinc® remote technology communicates voltage controls to the welding power source through one common weld cable, reducing cable clutter and minimizing unnecessary movement around the jobsite.

Chopper Technology feature provides easy starts, a smooth and consistent arc, and low spatter to help achieve optimal bead appearance

Chopper Technology®

LOWER COST OF OWNERSHIP

Variable Engine Speed/ Electronic Throttle Body Engine
Automatically adjusts the engine speed to help improve fuel efficiency and lower maintenance costs.

Auto Stop/Start
Automatically monitors machine use and places the engine into a standby power mode when not in use – helps save on fuel costs and machine hours.

- Up to $1200 in total savings (fuel and maintenance)*
- Integrated tap-to-start functionality while welding
- Included wireless remote fob for engine stop/start operation

Set the "No Load Period" of the machine (5-120 min)

When reached, engine will shut down, and machine will go into a standby mode

To restart engine, tap the electrode to the work piece or use your stop/start remote

*Savings based on of comparison of estimated 800 hours of active engine hours / run time.

BOLT PATTERN SPECIFICATIONS

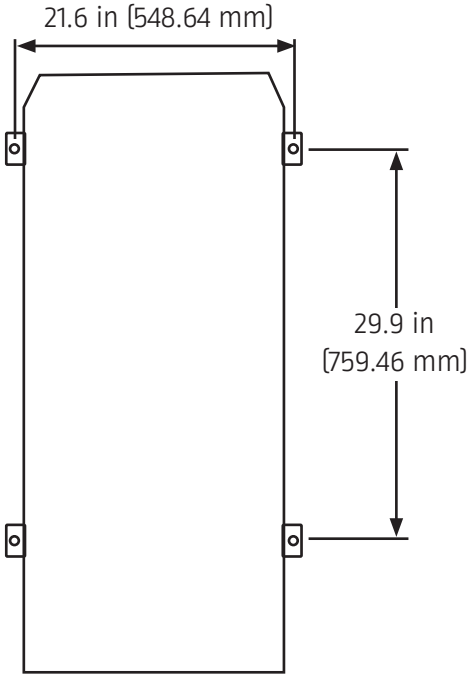

Recommended bolt pattern shown, utilizing brackets. Additional bolt patterns available – see operators manual.

1. Digital User Interface
2. GFCI
3. 120/240 Volt AC Full KVA Receptacle
4. Output Studs
5. Anderson Connector for Battery Charge/ Jump Assist
6. 18-Pin Connector for Optional Remote Panels
7. Front Battery Access for Easy Maintenance
8. Engine Start Switch
9. Scroll Knob
10. 240 Volt AC Receptacles
11. Ground Stud
12. 120 Volt AC Receptacles
13. Galvanized Base to Increase the Life of the Machine and Help Prevent Rusting

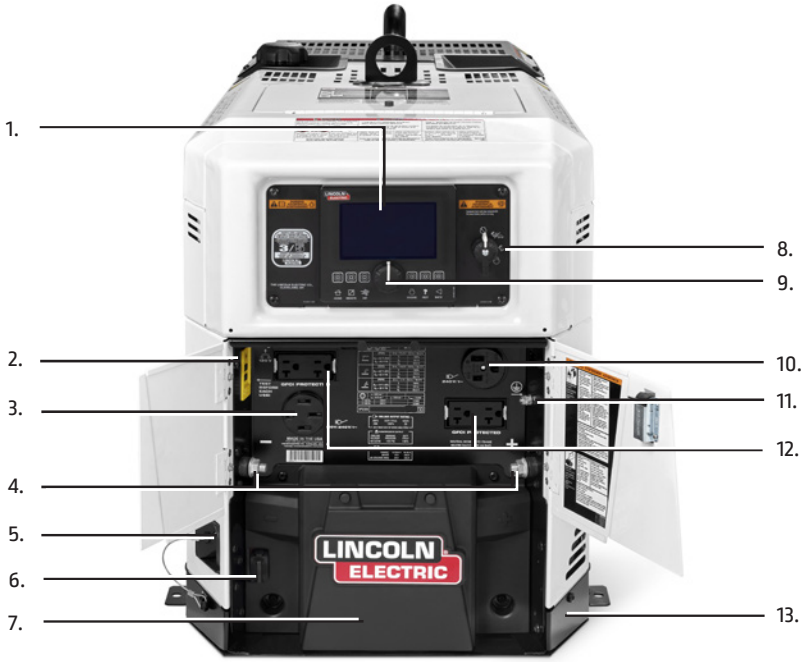

14. 6 Pin Connector to Easily Connect Remote Control Operations, or Foot or Hand Amptrol
15. Circuit Breakers
16. 7 pin Connector for the First in Class Direct Connect Spool Gun

RECOMMENDED ACCESSORIES

POWER SOURCES

Square Wave® TIG 200
A TIG welder that includes AC frequency controls and AC balance for great results on aluminum.
Order K5126-1

POWER MIG® 215 MPI™
A multi-process CV and CC welder provides easy to use interface to help achieve consistent weld performance.
Order K4878-1

Tomahawk® 45
Portable plasma cutter for fast and precise metal cutting.
Order K5458-1

Magnum® 250 LX GT Spool Gun
A quick-connect hand held semiautomatic wire feeder for welding 1lb spools.
Order K3569-2

STICK OPTIONS

Accessory Kit
400 amp nominal rating stick welding kit with: electrode holder, work clamp, 35' 2/0 cables, helmet, & electrode holder.
Order K704

Accessory Kit
For stick welding. Includes 20 ft. (6.1 m) #6 electrode cable with lug, 15 ft. (4.6 m) #6 work cable with lugs, headshield, filter plate, work clamp, electrode holder and sample pack of mild steel electrode. 150 amp capacity.
Order K875

Remote Control Kit
A control box allowing adjustable output from varying cable lengths.
Order:
K857-1 for 100ft
K4330-1 for 125ft
K4268-1 for 125ft with 115VAC receptacle

CrossLinc Remote
A Remote control added in-line with the welding power cable allowing remote output control of the power source through the weld cable for Stick, TIG and Gouging processes
K4345-1

TRAILERS AND UNDERCARRIAGES

Shown with optional K2639-1 Fender & Light Kit

Small Two-Wheeled Road Trailer
Two-wheeled trailer with a standard Duo-Hitch™ for heavy-duty road, off road, plant and yard use. Includes pivoting jack stand, safety chains and 13in wheels.
Order:
K2635-1 Trailer
K2639-1- Fender and light kit
K2640-1 Cable Rack

ADDITIONAL ACCESSORIES

Power Plug Kit
Provides four 120V plugs rated at 20 amps each, and one dual voltage, full KVA plug rated at 120/240V, 50Amps.
Order K802N

Spark Arrestor
Attaches to muffler exhaust tube and virtually eliminates spark emissions.
Order K3679-1

Ballistic Nylon Cover
A mildew resistant and water repellent cover to protect the engine drive when not in use.
K5492-1

Kohler® Tune-Up Kit
Engine maintenance kit includes: Spark plugs, in-line fuel filter, air filter pre-cleaner, oil, and oil filter.
K5546-1

Strain Relief Kit
Provides two stainless steel shackles to attach to the front of the machine for improved cable management.
Order K5322-1

Advanced Wireless Controller
Field-installed kit allows operators to switch between welding processes, adjust welding parameters, recall saved memories and stop/start the machine from a distance.
Order K5265-3

Battery Jump Cables
Order K5495-1

Air Compressor Service Kit
Order K5494-2 for 50 hour
Order K5494-1 for 500 hour

MACHINE SPECIFICATIONS

Product Name	Ordering Information	Rated Output	Output Range	Generator AC Power [2][3]	Dimensions H x W x L inches (mm)	Weight lbs (kg)
Ranger Air 330MPX	K5239-1	Battery Jump Assist: 330A Battery Charge: 25A or 50A IEC Rating: CC-Stick: 292A/31.7V/100% Touch-Start TIG: 325A/23V/100% CV-Wire:[1] 312A/29.6V/100% NON-IEC Rating: 330A/28V/100%	Battery Jump/Charge: 12V/24V CC-Stick: 35A - 330A Touch-Start TIG: 25A - 330A CV-Wire: 35A - 330A	11,500 Watts Peak 10,000 Watts Continuous 60 Hz Single Phase Full KVA Receptacle 39.5 @ 240V 40A @ 120V ea. Branch Circuit [4] Four 120V Receptacles 20A Total [4]	Machine Only: 26 x 20 x 48 (660 x 508 x 914) To Top of Exhaust: 29 (737)	565 (256)

[1] DC constant voltage capability provides convenience and added safety when welding in electrically hazardous conditions.
[2] When welding, available auxiliary power will be reduced. Output voltage is within +\- 10% at all loads up to rated capacity.
[3] 120V will operate either 60 Hz or 50/60 Hz power tools, lights, etc.
[4] Circuits cannot be wired in parallel to operate the same device.

ENGINE SPECIFICATIONS

Engine Model	Description	Horsepower & Displacement	Ignition	Capacities Gals (Liters)	Operating Speeds RPM	Fuel Consumption Gals/Hr (Liters/Hr)
Kohler OHV [5] Command ECH749	2 Cylinder, 4 Cycle, OHV, Air-Cooled Gasoline Engine Aluminum Alloy Block with Cast Iron Liners Electronic Fuel Injection Electronic Throttle Body	26.5 HP @ 3600 RPM 45 cu in (725 cc)	Electric Start, 12V 12 VDC Battery, 410 Cold Cranking Amps, Rotary Start Switch	FUEL: 11 (41.6) OIL: 0.5 (1.8L)	FULL LOAD 3,600	1.9 (7.0)
					HIGH IDLE 3,600	0.6 (2.4)
					LOW IDLE 2,500	0.5 (1.8)

[5] Kohler warranty is 3 years.

AIR COMPRESSOR SPECIFICATIONS

Compressor Model	Compressor Description	Delivery	Maximum System Pressure	Compressor Protection	Capacities
Vanair®	Single Stage, Oil Injected Rotary Screw	40CFM @ 150 PSI (1.1 cmm @ 10.34 bar)	150 PSI (10.3 bar)	Safety Relieve Valve 225 PSI 15.4 bar High Temperature Automatic Shutdown 250°F (121°C)	.75 gal (2.84 liters)

For best welding results with Lincoln Electric equipment, always use Lincoln Electric consumables. Visit www.lincolnelectric.com for more details.

Manufactured at a facility with certified ISO Quality and Environmental Management Systems.

All trademarks and registered trademarks are the property of their respective owners

CUSTOMER ASSISTANCE POLICY

The business of Lincoln Electric is manufacturing and selling high quality welding equipment, automated welding systems, consumables, cutting equipment and EV charging systems. Our challenge is to meet the needs of our customers, who are experts in their fields, and to exceed their expectations. On occasion, purchasers may ask Lincoln Electric for information or technical information about their use of our products. Our employees respond to inquiries to the best of their ability based on information and specifications provided to them by the customers and the knowledge they may have concerning the application. Our employees, however, are not in a position to verify the information provided or to evaluate the engineering requirements for the particular weldment, or to provide engineering advice in relation to a specific situation or application. Accordingly, Lincoln Electric does not warrant or guarantee or assume any liability with respect to such information or communications. Moreover, the provision of such information or technical information does not create, expand, or alter any warranty on our products. Any express or implied warranty that might arise from the information or technical information, including any implied warranty of merchantability or any warranty of fitness for any customers' particular purpose or any other equivalent or similar warranty is specifically disclaimed.

Lincoln Electric is a responsive manufacturer, but the definition of specifications, and the selection and use of specific products sold by Lincoln Electric is solely within the control of, and remains the sole responsibility of the customer. Many variables beyond the control of Lincoln Electric affect the results obtained in applying these types of fabrication methods and service requirements.

Subject to Change – This information is accurate to the best of our knowledge at the time of printing. Please refer to www.lincolnelectric.com for any updated information.