Now Available Through Vanair® Dealers
VANAIR®
A Lincoln Electric Company
+1-800-526-8817 | vanair.com

RANGER® 330MPX™ AND RANGER® 330MPX™ EFI

Welder/Generator

Shown:
Ranger 330MPX (K3459-1) and
Ranger 330MPX EFI (K4779-1)

KEY FEATURES

The Ranger 330MPX welder/generator leads the way for the construction, maintenance, and service truck industries. Choose between a standard carburetor engine or an EFI (electronic fuel injection) engine that's ideal for high altitude applications and extreme temperatures.

The modern design and advanced features help streamline welding operations and improve efficiency at the job site. The low decibel rating helps keep your work environment comfortable while the 25 HP engine gives you the power and confidence to take on the toughest jobs.

- Easy-to-Use Digital User Interface
- Full Suite of Smart Features
- Clean AC Generator Power

LINCOLN ELECTRIC 3 YEAR WARRANTY AÑOS DE GARANTIA ANS DE GARANTIE PARTS AND LABOR PARTES Y MANO DE OBRA PIÈCES ET MAIN D'OEUVRE

Processes »
Stick, MIG, TIG, Flux-Cored, & Gouging

Output »
CC CV | DC | 11 kW

Input »

Applications »
Construction
Maintenance & Repair
Service Truck
Rental
Pipeline Welding

Product Number »
K3459-1 Ranger 330MPX
K4779-1 Ranger 330MPX EFI

Publication E6.110 | Issue Date 05/23
© Lincoln Global Inc. All Rights Reserved All trademarks and registered trademarks are the property of their respective owners.
www.lincolnelectric.com

LINCOLN® ELECTRIC

ADVANCED FEATURES

» Enhanced remote control capabilities offer operators the ability to select their preferred remote amperage scale

» Enable the supervisor and operator passcode protection to lock settings and weld modes

» The maintenance screens allows the machine to record engine hours for proper service and maintenance

SMALLER SIZE

- Up to 20% smaller footprint than other machines in its class
- Up to 25% lighter making it easier to maneuver around the job site
- Up to 31% smaller in volume than other machines in its class

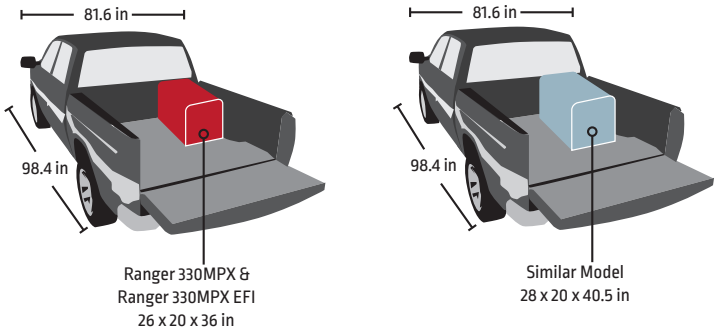

QUIETER SOUND

- Up to 60% quieter than other machines in its class
- Engineered to enhance operator comfort and safety

Ranger 330MPX & Ranger 330MPX EFI	Similar Model A	Similar Model B
74.7 dB	78.3 dB	76.1 dB

SMARTER MACHINE

PERFORMANCE-BOOSTING TECHNOLOGY

- **Ready.Set.Weld®** intuitive push-and-turn digital controls make setup a breeze
- **Chopper Technology®** feature provides easy starts, a smooth and consistent arc, and low spatter for optimal bead appearance
- **ArcFX®** technology provides instant graphical feedback on how settings affect the weld outcome
- **CrossLinc®** remote technology communicates voltage control to the welding power source through one common weld cable

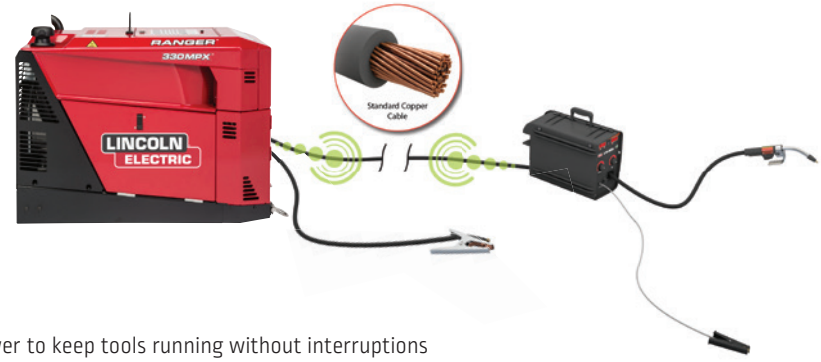

HIGH QUALITY OPERATIONS

- Clean AC generator with 10 kW of continuous, consistent power to keep tools running without interruptions
- New engine driven weld modes: downhill pipe, touch-start pulse TIG, and pulse spool gun
- Plenty of power at 330A/28V for 100% duty cycle to weld ¼ in. 7018 electrode
- Fine tune adjustments available on: hot start, arc force, and pinch controls
- Arc gouging capabilities up to 3/16" carbon electrode

ELECTRIC FUEL INJECTION (EFI) ENGINE

The EFI engine on the Ranger 330MPX EFI welder/generator delivers several key advantages:

- Advanced design excels in high altitude applications
- Quick and easy starts in cold weather with no choke required
- Provides consistent operation and improved fuel efficiency

EASY INSTALLATION & FEATURED ACCESSORY

NEW BOLT PATTERN MOUNTING SPECIFICATIONS
BASE VIEW

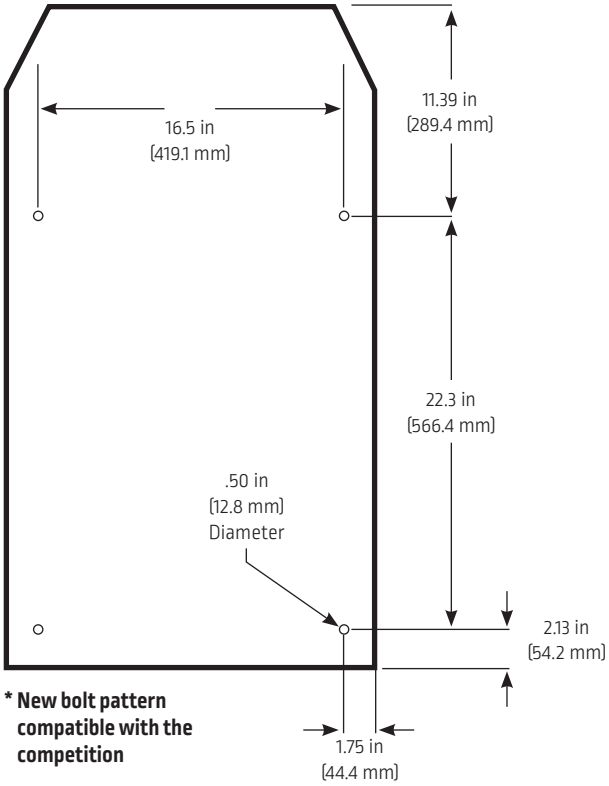

*** New bolt pattern compatible with the competition**

MAGNUM® PRO 250LX GT SPOOL GUN

The Magnum PRO 250 LX GT Spool Gun is the first direct connect spool gun in its class to provide a cost saving solution with no additional accessories required. Purchase K3569-2 with your Ranger and thats all you need!

KEY CONTROLS

1. Amps
2. Fuel Gauge
3. Weld Mode
4. Home Button
5. Local/Remote Button
6. Output
7. Advanced Weld Feature w/ ArcFX Technology
8. Ready.Set.Weld. Parameters
9. Back Button
10. Help Button

KEY CONTROLS

1. Digital User Interface
2. Engine Choke Control*
3. GFCI
4. 120/240 Volt AC Full KVA Receptacle
5. Output Studs
6. Front battery access for easy maintenance
7. Engine Start Switch
8. Scroll Knob
9. 240 Volt AC Receptacles
10. Ground Stud
11. 120 Volt AC Receptacles
12. Galvanized base to increase the life of the machine and prevent rusting
13. Strain Relief Kit (K5322-1) to help improve cable life

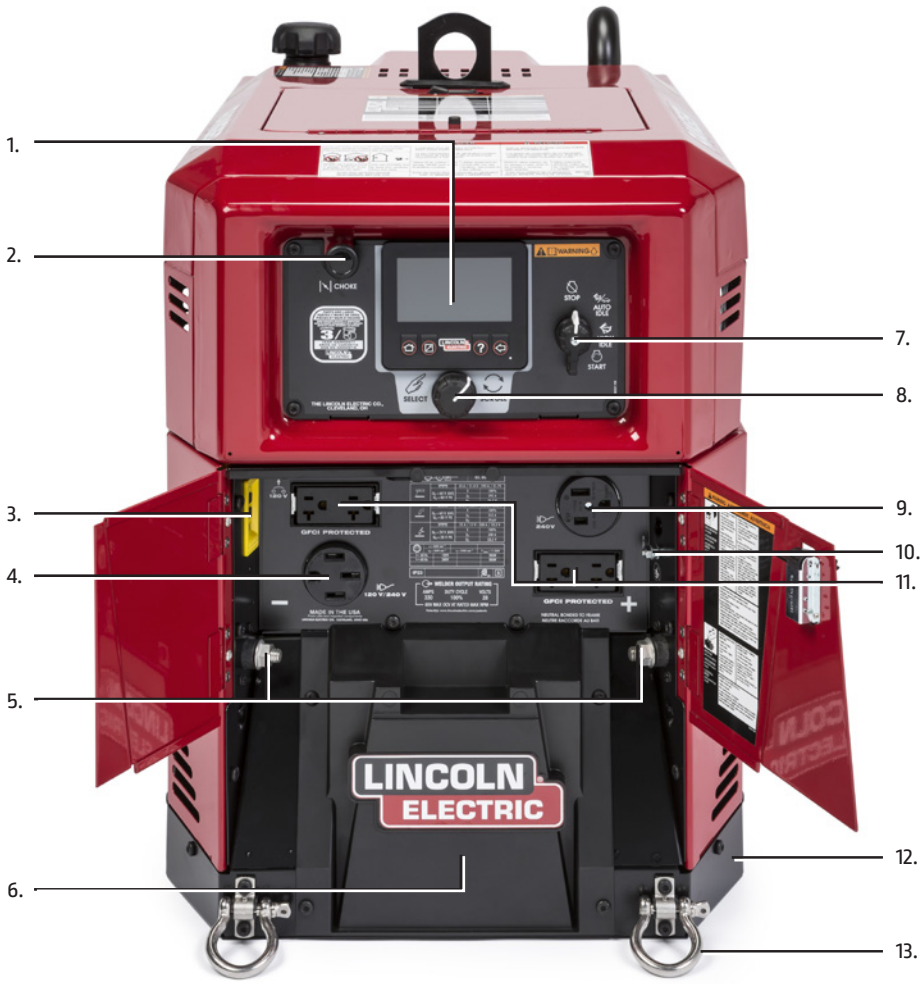

14. 6-pin connector for easy to connect remote control operations, or foot or hand amptrol
15. Circuit Breakers
16. 7-pin connector for the first in class direct connect spool gun

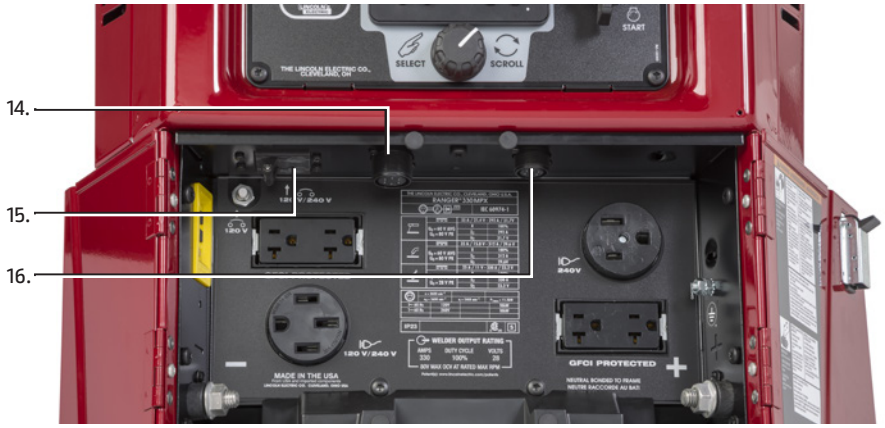

*Engine choke control only featured on standard Ranger 330MPX model (K3459-1).

RECOMMENDED ACCESSORIES

POWER SOURCES

Square Wave® TIG 200
A TIG welder that includes AC frequency controls and AC balance for great results on aluminum.
Order K5126-1

POWER MIG® 210 MP®
A multi-process CV and CC welder provides easy to use interface to help achieve consistent weld performance.
Order K3963-1

POWER MIG 180C
Compact CV wire welder for MIG and flux-cored welding.
Order K2473-2

Tomahawk® 1000
Portable plasma cutter for fast and precise metal cutting.
Order K2808-1

WIRE FEEDERS

Activ8X®
Compact wire feeder providing simple controls and across-the-arc operations.
Order K3519-1

LN-25X®
Portable, easy to set, and reliable wire feeder with CrossLinc® Technology.
Order K4267-1

LN-25X / Magnum® PRO Curve™ 045C One-Pak®
Wire Feeder Includes: LN-25X Feeder, Magnum PRO Curve welding gun Ready-Pak®, .040-.045 in. (1.0-1.2 mm) Cored Wire Drive Roll Kit.
Order K4100-1

LN-25X / K126® PRO 1/16-5/64C One-Pak
Wire Feeder Includes: LN-25X Wire Feeder, K126 PRO Innershield® 350A FCAW-SS Welding Gun, 5/64 in. (2.0mm) Solid/Cored Wire Drive Roll Kit, 1/16 in. (1.6mm) Cored Wire Drive Roll Kit.
Order K4100-2

Magnum 250 LX GT Spool Gun
A quick-connect hand held semiautomatic wire feeder for welding 1lb spools.
Order K3569-2

Adjustable Gas Regulator & Hose Kit
A gas regulator for CO2, Argon, and Argon blends. Kit includes: Pressure gauge, dual scale flow gauge, and 4.3 ft. (1.3mm) gas hose.
Order K586-1

STICK OPTIONS

Accessory Kit
400 amp nominal rating stick welding kit with: electrode holder, work clamp, 35' 2/0 cables, helmet, & electrode holder.
Order K704

Accessory Kit
For stick welding. Includes 20 ft. (6.1 m) #6 electrode cable with lug, 15 ft. (4.6 m) #6 work cable with lugs, headshield, filter plate, work clamp, electrode holder and sample pack of mild steel electrode. 150 amp capacity.
Order K875

Remote Control Kit
A control box allowing adjustable output from varying cable lengths.
Order:
K857-1 for 100ft
K4330-1 for 125ft
K4268-1 for 125ft with 115VAC receptacle

CrossLinc® Remote
A Remote control added in-line with the welding power cable allowing remote output control of the power source through the weld cable for Stick, TIG and Gouging processes
K4345-1

TIG OPTIONS

Pro-Torch™ PTA-26 TIG Torch
Air-cooled 200 amp torch (2 piece separate power conductor and a braided gas hose).
Order K1783-4

Magnum Parts Kit for PTA-26V
Provides all the torch accessories to start welding. Kit includes: collets, collet bodies, a back cap, alumina nozzles, and tungsten in a variety of sizes.
Order KP509

Foot Amptrol™
Provides 25ft. of adjustable weld current based on the applied pressure on the pedal, great for making critical TIG welds and crater filling.
Order K870

Wireless Foot Amptrol
Wireless foot pedal, great for making critical welds and crater filling remotely.
Order K4986-1

Hand Amptrol
Provides 25ft of remote current control through a handheld regulator.
Order K963-3

TRAILERS AND UNDERCARRIAGES

Shown with optional K2639-1 Fender & Light Kit

Small Two-Wheeled Road Trailer
Two-wheeled trailer with a standard Duo-Hitch™ for heavy-duty road, off road, plant and yard use. Includes pivoting jack stand, safety chains and 13in wheels.
Order:
K2635-1 Trailer
K2639-1- Fender and light kit
K2640-1 Cable Rack

All Terrain Undercarriage
Portable cart for moving the engine drive by hand over construction sites with a heavy-duty design.
Order K3590-1 Pneumatic Tires
Order K3590-2 Flat-Free Tires

Factory Undercarriage
Portable cart for moving the engine drive by hand over smooth surfaces with a heavy-duty design.
Order K3589-1 Pneumatic Tires
Order K3589-4 Flat-Free Tires

Gas Cylinder Holder
Holds welding gas cylinder. Includes rack with bottle bracket and safety chain. Compatible with the following undercarriages: K3590-1 and -2, K3589-1 and -2.
Order K3592-1

ADDITIONAL ACCESSORIES

Power Plug Kit
Provides four 120V plugs rated at 20 amps each, and one dual voltage, full KVA plug rated at 120/240V, 50Amps.
Order K802N

Spark Arrestor
Attaches to muffler exhaust tube and virtually eliminates spark emissions.
Order K3679-1

Ballistic Nylon Cover
A mildew resistant and water repellent cover to protect the engine drive when not in use.
K3588-1

Kohler® Tune-Up Kit
Engine maintenance kit includes: Spark plugs, in-line fuel filter, air filter pre-cleaner, oil, and oil filter.
K3494-1

Strain Relief Kit
Provides two stainless steel shackles to attach to the front of the machine for improved cable management.
Order K5322-1

Rotatable Exhaust Kit
The Rotatable Exhaust Kit provides the ability to change the direction of the machine's exhaust.
Order K4895-1

MACHINE SPECIFICATIONS

Product Name	Ordering Information	Description	CC Rated Output Current/ Voltage/ Duty Cycle	CV-Rated Output Current/ Voltage/ Duty Cycle	Generator AC Power [2][3]	Dimensions H x W x L inches (mm)	Weight lbs. (kg)
Ranger 330MPX	K3459-1 Painted Roof, Case Sides and Engine Doors	330 Amp DC Mulit-Process Arc Welder with Chopper Technology 11,500 Watts Peak AC Power 10,000 Watts Continuous AC Power	DC Constant Current 330A/28V/100% DC Pipe Current 330A/28V/100% Touch Start TIG 330/23.2/100% 60V DC Max OCV @ 3700 RPM	DC Constant Voltage[1] 312A/29V/100% 14-29 V	11,500 Watts Peak 10,000 Watts Continuous 60 Hz Single Phase Full KVA Receptacle 42A @ 240V 40A @ 120V ea. Branch Circuit [4] Four 120V Receptacles 20A Total [4]	26 x 20 x 36 (660 x 508 x 914)	446 (202)
Ranger 330MPX EFI	K4779-1 Painted Roof, Case Sides and Engine Doors						

[1] DC constant voltage capability provides convenience and added safety when welding in electrically hazardous conditions.
[2] When welding, available auxiliary power will be reduced. Output voltage is within +\- 10% at all loads up to rated capacity.
[3] 120V will operate either 60 Hz or 50/60 Hz power tools, lights, etc.
[4] Circuits cannot be wired in parallel to operate the same device.

ENGINE SPECIFICATIONS

Engine Model	Description	Horsepower & Displacement	Ignition	Capacities	Operating Speeds	Fuel Consumption
Kohler OHV [5] Command CH740 Gasoline	2 Cylinder, 4 Cycle, OHV, Air-Cooled Gasoline Engine Aluminum Alloy Block with Cast Iron Liners Electric Fuel Pump	25 HP @ 3600 RPM 44.2 cu in (725 cc)	Electric Start, 12V Group 99 Battery, 410 Cold Cranking Amps, Rotary Start Switch	FUEL: 11 Gals (41.6 liters) OIL: 2.0 Qts (1.9 liters)	FULL LOAD 3,600 RPM HIGH IDLE 3650 RPM LOW IDLE 2,400 RPM	1.6 Gals/Hr 6.1 liters/Hr 0.8 Gals/Hr 3.1 liters/Hr 0.6 Gals/Hr 2.1 liters/Hr
Kohler® OHV Command® ECH740 Gasoline	2 Cylinder, 4 Cycle, OHV, Air-Cooled Gasoline Engine Aluminum Alloy Block with Cast Iron Liners Electric Fuel Pump Electronic Fuel Injection			FUEL: 11 Gals (41.6 liters) OIL: 2.0 Qts (1.9 liters)	FULL LOAD 3,600 RPM HIGH IDLE 3650 RPM LOW IDLE 2,400 RPM	1.9 Gals/Hr 7.1 liters/Hr 0.7 Gals/Hr 2.6 liters/Hr 0.5 Gals/Hr 2.0 liters/Hr

[5] Kohler warranty is 3 years.

PRODUCT SPECIFICATIONS

Product Number	Engine	Rated Output Current /Voltage/Duty Cycle	AC Generator Power Output	Capacities	Dimensions	Noise At Full Load (dBA)	Net Weight lb (kg)
K3459-1	Kohler OHV CH740	NON-IEC Rating: Maximum Output: 330A/28V/100% IEC Rating: DC Stick: 292A/31.7V/100% DC TIG: 330A/23.2V/100% DC Constant Voltage: 312A/ 29.6V 100%	1-Ph/AC Power: 10 kW Continuous 11.5 kW Peak	Fuel: 11 gal. Oil: 2.0 qts	26 x20 x36 (660 x 508 x 914)	74.7 dBA	446 (202)
K4779-1	Kohler OHV ECH740						

For best welding results with Lincoln Electric equipment, always use Lincoln Electric consumables. Visit www.lincolnelectric.com for more details.

Manufactured at a facility with certified ISO Quality and Environmental Management Systems.

All trademarks and registered trademarks are the property of their respective owners

CUSTOMER ASSISTANCE POLICY

The business of Lincoln Electric is manufacturing and selling high quality welding equipment, automated welding systems, consumables, and cutting equipment. Our challenge is to meet the needs of our customers, who are experts in their fields, and to exceed their expectations. On occasion, purchasers may ask Lincoln Electric for information or technical information about their use of our products. Our employees respond to inquiries to the best of their ability based on information and specifications provided to them by the customers and the knowledge they may have concerning the application. Our employees, however, are not in a position to verify the information provided or to evaluate the engineering requirements for the particular weldment, or to provide engineering advice in relation to a specific situation. Accordingly, Lincoln Electric does not warrant or guarantee or assume any liability with respect to such information or communications. Moreover, the provision of such information or technical information does not create, expand, or alter any warranty on our products. Any express or implied warranty that might arise from the information or technical information, including any implied warranty of merchantability or any warranty of fitness for any customers' particular purpose or any other equivalent or similar warranty is specifically disclaimed.

Lincoln Electric is a responsive manufacturer, but the definition of specifications, and the selection and use of specific products sold by Lincoln Electric is solely within the control of, and remains the sole responsibility of the customer. Many variables beyond the control of Lincoln Electric affect the results obtained in applying these types of fabrication methods and service requirements.

Subject to Change – This information is accurate to the best of our knowledge at the time of printing. Please refer to www.lincolnelectric.com for any updated information.

The Lincoln Electric Company
22801 St. Clair Avenue · Cleveland, OH · 44117-1199 · U.S.A.
www.lincolnelectric.com